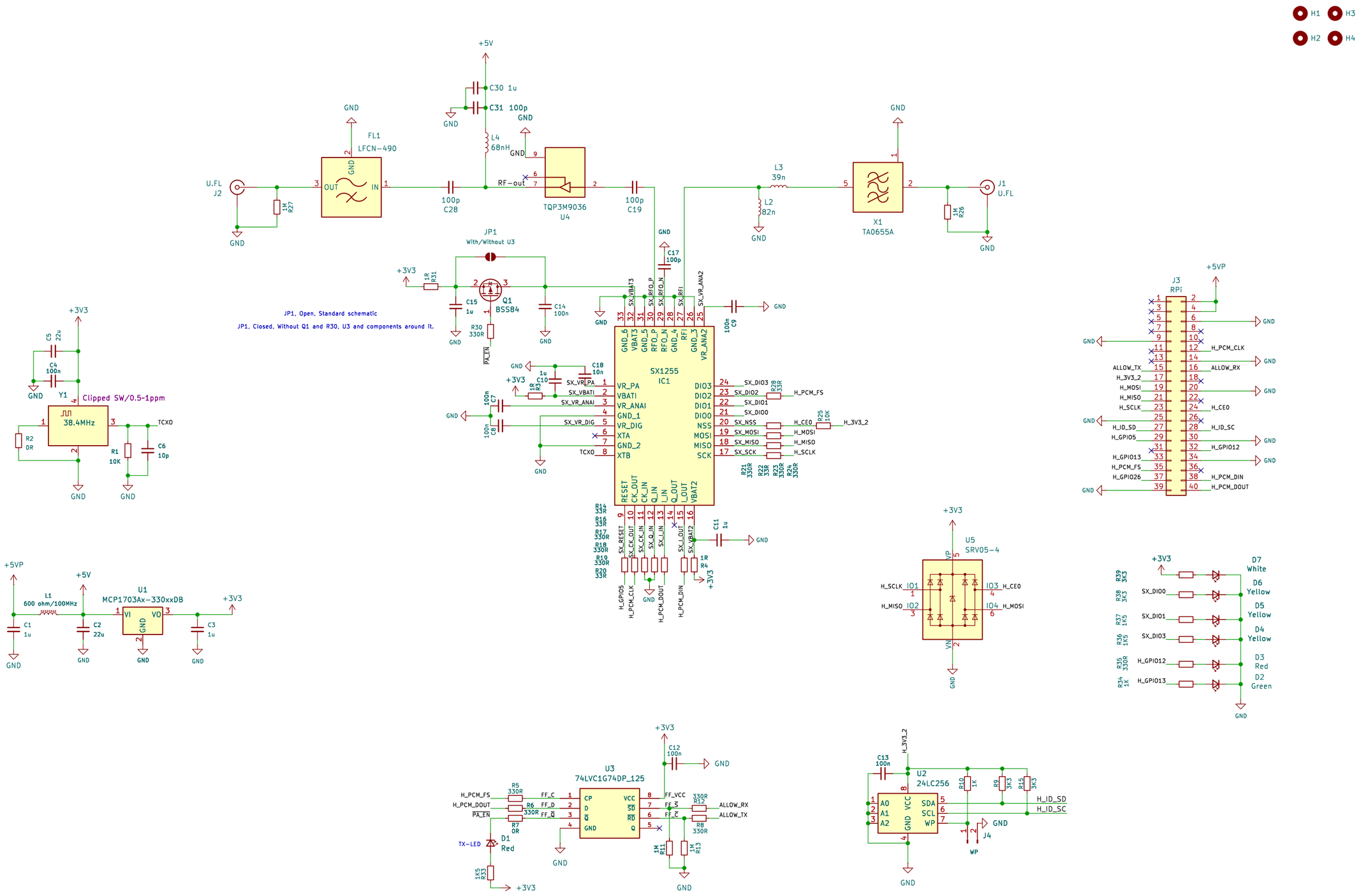

Modified SXceiver

Z32IT

Sheet: /

File: HAT with PA.kicad_sch

Title: HAT little PA

Size: A3	Date: 2026-04-08	**Rev: V1.3**
KiCad E.D.A. 9.0.7		Id: 1/1